Ohio Medical Corporation®
always there | for life

Squire-Cogswell®
Division of Ohio Medical

Operation & Maintenance Manual For Rotary Vane Vacuum Pumps & Systems

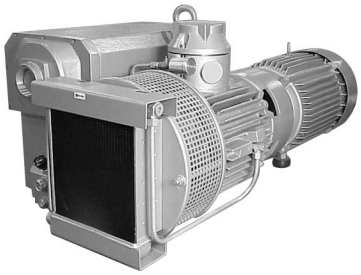





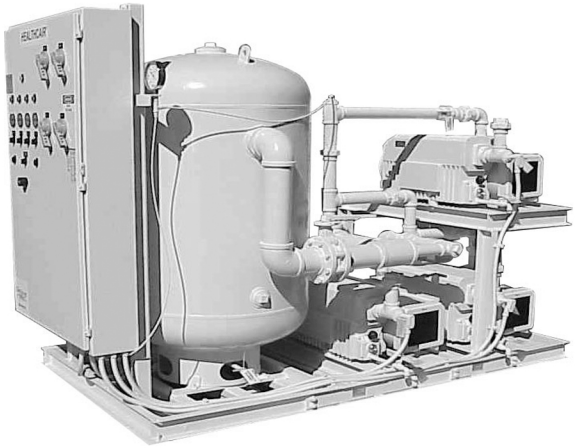

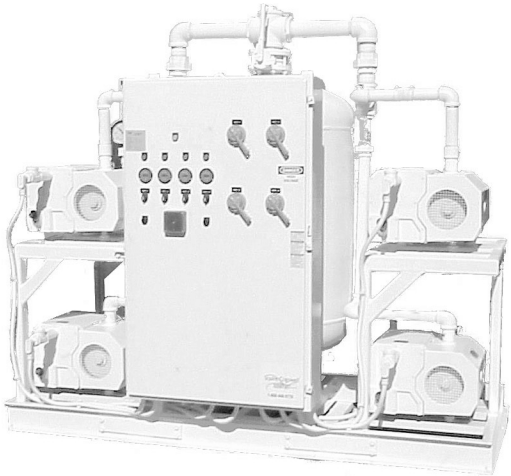

Date: 9/2009
P/N 255450-S2-S3L (Rev. 2)

www.ohiomedical.com
servicedept@ohiomedical.com

OHIO MEDICAL CORPORATION

Terms and Conditions of Sale

1. QUOTATIONS: All prices quoted shall be effective for ninety-days only and are subject to change thereafter without notice. The Buyer's issuance of an order in response to Company's quotation shall be deemed an acceptance of the terms and conditions of sale herein. All orders subject to acceptance by our Office

2. TERMS: Payment terms for custom fabricated equipment unless otherwise expressly agreed shall be 1/3 down with order and the balance payable net 30 days from the date of invoice. All other purchases are subject to terms of net 30. Invoices shall be dated on the day of shipment and are payable on the face of invoice on approved credit payable in U.S. Dollars. All orders are subject to credit approval.

Ohio Medical Corporation shall have the right to collect reasonable expenses, including attorneys fees incurred in enforcing the collection of any amount due. No retention allowed.

There will be a $50.00 charge incurred for all NSF checks returned.

No final lien release given until payment in full is received, nor partial lien release without a payment.

3. CANCELLATIONS: A written, signed purchase order is required for any fabricated product. Cancellation, waiver or alteration of the purchase order can be only made with the written consent of Ohio Medical Corporation and are subject to the following cancellation charges of

-30% of purchase price after design completion and submittal approval

Additional charges will be added to cover non-recoverable costs and/or the amount of any fabrication

4. RETURNS: Merchandise returned without specific written authorization from Ohio Medical Corporation will not be accepted. We will not be responsible for any transportation or other charges resulting from disregarding this clause. All items to be returned must have a Return Material Authorization (RMA) number. To be considered for credit, these items must be in original new condition. Items that are damaged or special ordered shall not be accepted for return and no credit will be issued.

Requests for RMA's for medical gas pipeline equipment must be made within 180 days of the original shipment to the Buyer. A 25% restocking charge applies on returns before 90 days after original shipment. A 50% restocking charge applies on returns after 90 days of original shipment.

Requests for RMA's for all other type of material must be made within 30 days of original shipment to the Buyer. A 25% restocking charge applies to these returns. Returned items must be shipped prepaid within 30 days of the RMA date.

5. Delays: Seller will not be liable for any delay in the performance of orders or contracts, or in the delivery or shipment of goods, or for any damages suffered by Buyer by reason of such delay, if such delay is directly or indirectly, caused by, or in any manner arises from fires, floods, accidents, civil unrest, acts of God, war, strikes, labor difficulties, shortage of labor, fuel, power, materials, or supplies, transportation delays, or any other causes beyond its control.

6. SHIPPING CLAIMS & BREAKAGE We do not assume responsibility for loss, damage or breakage in transit. Carriers are responsible for goods lost or damaged in transit; therefore as requires in rule 3 of Uniform Bill of Lading, in case of loss or damage enroute, consignee must immediately notify the transportation agent of destination, in writing, in order to substantiate formal claim when presented.

7. Defective Goods Claims: Claims for shortages or defects must be made with in 10 days of receipt of shipment.

All our products are carefully inspected, and where possible, tested before shipment. If goods appear to be defective advise us immediately and the matter will be investigated promptly. If we find the defect to be due to faulty material or workmanship, the goods will, at our option be credited, repaired or replaced. We assume no responsibility for damages occasioned by defective goods. We will also not assume any expense in repairing defective goods unless our written consent has first been obtained.

8. WARRANTY: Please refer to the appropriate warranty issued with and for the specific product purchased. **NO WARRANTY MADE AS TO THE PRODUCT PURCHASED, EXPRESS OR IMPLIED, INCLUDING ANY WARRANTY AS TO THE MERCHANTABILITY OR FITNESS FOR ANY PURPOSE IS MADE UNLESS THE SAME IS SET FORTH IN THE WARRANTY STATEMENTS HEREIN ABOVE REFFERED TO AND WHICH ARE MADE AND RELATE TO THE SPECIFIC PRODUCT PURCHASED.**

9. CORRECTIONS: In all cases, clerical and or typographical errors are subject to correction.

10. Delivery: Unless otherwise expressly agreed, all shipments are made strictly F.O.B. Manufacturer's Factory COLLECT. Since prices are quoted Manufacturer's Factory a pro-rated bulk charge from their factory to our warehouse may be added to the freight charge. Unless route and carrier are specifically stated, we reserve the right to route shipments at our discretion.

11. TAX: The amount of any sales, processing, or other tax, federal or state, now in effect or hereafter imposed, which the manufacturer (seller) is or shall become obligated to pay, either on his own behalf or on the behalf of the purchaser, or otherwise with respect to material covered by this quotation (order) (contract) and any increase in the manufacturer's (seller's) cost attributed to compliance with any code, agreement or license approved, prescribed or issued pursuant to the terms of any Federal, State or local acts, shall (unless such prices are expressly stated to be inclusive of such tax or increased costs) be added to the prices contained herein and paid by the purchaser in the same manner and with the same effects as if originally added hereto.

12. SALES TAX: The Company's charges do not include sales, use, excise or similar taxes. Consequently, in addition to the charges specified herein, the amount of any present or future sales, use, excise or other similar tax applicable to the sale, repair, inspection, maintenance, modification, or use of the equipment shall be paid by the Buyer, or in lieu thereof the Buyer shall provide the Company with a tax exemption certificate acceptable to the taxing authorities.

13. Start-up Assistance: Ohio Medical Corporation will provide start-up assistance as specified in the quotation. Four weeks notification is required. Start-ups are scheduled during normal business hours (Monday through Friday from 8:00am till 4:30pm). Start-up outside of these parameters will incur additional charges.

14. Equal Opportunity: We hereby certify that with the respect to the production of the article, and/or performance of the services covered by this order or invoice, the Seller has fully complied with all applicable requirements of Sections 6,7 and 12 of the Fair Labor Standards Act, as amended, and all requirements of the U.S Department of Labor issued under Section 14 thereof.

15. General: Buyer's obligation shall be governed by, and construed in accordance with, the internal laws of the State of Illinois, without regard to principle of conflicts of law. Buyer hereby irrevocably agree that all disputes arising out of or relating to these terms and conditions or the goods sold hereunder that cannot be resolved by the parties shall be resolved only by the State or Federal courts located in Lake County, Illinois. Buyer hereby consents and submits to the exclusive jurisdiction and venue of such State and Federal courts and waives any objection or right to contest said jurisdiction or venue or that any such action or proceeding was brought in an inconvenient court. It is agreed that either party may communicate with the other by electronic means. Each party agrees when electronic communications are used, they are deemed to be the equivalent of written and signed documents.

16. Minimum Billing: A minimum billing charge of $50.00 will apply to all orders.

17. Controlling Provisions: These terms and conditions shall take the place of as well as supersede any provisions, terms, and conditions contained on any confirmation order, purchase order, or any other writing Buyer may give or receive, and the rights of the parties shall be governed exclusively by the provisions, terms, and conditions hereof. THE SELLER WILL NOT ACCEPT ANY TERMS OR CONDITIONS ATTACHED TO ANY CONFIRMATION ORDER, PURCHASE ORDER, OR ANY OTHER WRITING THAT BUYER MAY GIVE EXCEPT THOSE THAT SELLER EXPRESSLY AGREES TO IN WRITING. The issuance of any such order by the seller shall be deemed to note Buyers assent not only to this paragraph but also to each and every paragraph of this document and this order may not be changed or modified orally.

550120 Rev 4

Table of Contents

TERMS AND CONDITIONS……...2
VACUUM AND COMPRESSED AIR SYSTEMS LIMITED WARRANTY……...4
PUMP - COMPRESSORS WARRANTY...…..……5
INSPECTION UPON DELIVERY....……..…….……..6
FOR YOUR SAFETY.....…..6
LOCATION……8
INSTALLATION……8
SETTING IN PLACE……9
MOUNTING AND ANCHORING……..10
NOISE.....……...…….....10
PIPING CONNECTIONS…….....……...10
ELECTRICAL CONNECTIONS……11
INITIAL START-UP ..……12
PRE START-UP CHECK LIST……...……...…….……12
CHECK ELECTRICAL SERVICE……12
STOPPING FOR MAINTENANCE……...……..13
CHECK PUMP ROTATION……..13
CHECK MECHANICAL SERVICE……...13
START-UP *FOR BARE PUMPS ONLY……14
SEQUENCE OF OPERATION……14
SYSTEM SAFETY FEATURE AND ALARMS……...14
SHUTTING DOWN THE PUMP *FOR BARE PUMPS ONLY ....……...15
MAINTENANCE SCHEDULE……...16
THEORY OF OPERATION/PUMP CAPACITY……17
SYSTEM COMPONENT/MAINTENANCE……18
OIL/OIL CHANGES……20
PRE START-UP CHECK LIST FORM ……...21
MAINTENANCE LOG ……..……..……...23
TROUBLESHOOTING GUIDE……25
CLEARANCES……30
EXHAUST VALVE ASSEMBLY……...31
DRAWINGS ……..……..32
PARTS LIST……35
REPLACEMENT PARTS LIST……37

OHIO MEDICAL / SQUIRE-COGSWELL
VACUUM AND COMPRESSED AIR SYSTEMS
LIMITED WARRANTY

1. OHIO MEDICAL warrants to the original purchaser its Vacuum and Compressed Air Systems to be free from functional defects in material and workmanship for a period of (30) thirty months from the date of shipment, or for a period of (24) twenty-four months from the date of start-up, whichever comes first.

   a. Ohio Medical recommends that start-up should only be done by an authorized representative of Ohio Medical.

2. In the event there is a functional defect either in material or workmanship Ohio Medical will only repair or replace any part or component which is proven to be defective.

   a. System Components sold as individual items are not warranted to include job site installation and wiring, and the warranty set forth in Paragraph 1 is limited to complete units which include all factory installed components and interconnected piping and wiring.
   b. Labor on site is limited to functional defects in workmanship found to be defective at the time of start-up.
   c. The replacement of normal wearing or maintenance items (including but not limited to packings, mechanical seals, oil seals, piston rings, contacts, coils, fuses, etc.) made in connection with normal maintenance services are not covered by this warranty.

3. To obtain service within the warranty period, first contact your authorized Ohio Medical dealer or the Ohio Medical Service Department. Ohio Medical's responsibility under this warranty shall be limited to providing at Ohio Medical's sole discretion new or similar rebuilt replacement parts to replace any component found to be defective within the warranty period.

   a. Labor to repair any part or component proved to be defective within the warranty period will be provided at no charge for any item returned to our factory adequately packaged and insured with shipping costs prepaid. Standard surface freight shipping cost and return of the repaired part or component will be paid by Ohio Medical.
   b. Before returning any part or component to the factory for warranty consideration, proper return authorization and warranty claim form must first be obtained from Ohio Medical Customer Support or Service Department. A Purchase Order must be supplied by the claimant in the event that repairs or products returned for warranty consideration are determined to be of a Non-Warranty status.
   c. The user will be required to issue a Purchase Order for replacement items. Upon reciept of the defective items, Ohio Medical Corporation will issue a credit to the user in the amount equal to the purchase order.

4. The warranty is valid only when the product has been properly installed according to Ohio Medical specifications, used in a normal manner and serviced according to factory recommendations. It does not cover failure due to damage which occurs in shipment or failures which result from accidents, misuse, abuse, neglect, mishandling, alteration, misapplication or damage that may be attributable to acts of God. Similarly, this warranty does not apply to units that are re-sold or rented to others by the purchaser.

5. Ohio Medical shall not be liable for incidental or consequential damages resulting from the use of this product. There are no expressed or implied warranties which extend beyond the warranty of fitness for a particular purpose to the equipment and/or to its parts and components.

6. THE CONDITIONS OF THE BUYER'S RESPONSIBILITY ARE:
   6.1 The equipment is stored properly before installation.
   6.2 The equipment is installed according to Ohio Medical specifications and installation procedures.
   6.3 The room where the equipment is installed meets stated operating temperatures.
   6.4 The equipment is placed into initial operation by an authorized representative of Ohio Medical.
   6.5 The equipment is properly maintained and is not repaired or altered unless by an authorized representative of Ohio Medical.

Ohio Medical Corporation®
always there | for life

Squire-Cogswell
Division of Ohio Medical

PUMPS - COMPRESSORS
LIMITED WARRANTY

1. OHIO MEDICAL CORPORATION warrants to the original purchaser its Vacuum Pumps and Air Compressors to be free from functional defects in material and workmanship for a period of twelve (12) months from the date of shipment.

2. In the event there is a functional defect either in material or workmanship Ohio Medical Corporation will only repair or replace any part or component which is proven to be defective.

a. System components sold as individual items are not warranted to include job site installation and wiring.

b. The replacement of normal wearing or maintenance items (including but not limited to packing, mechanical seals, oil seals, piston rings, contacts, coils, fuses, etc.) made in connection with normal maintenance services are not covered by this warranty.

3. To obtain service within the warranty period, first contact your authorized Ohio Medical Corporation dealer or the Ohio Medical Corporation Service Department. Ohio Medical Corporation's responsibility under this warranty shall be limited to providing, at Ohio Medical Corporation's sole discretion, new or similar rebuilt replacement parts to replace any component found to be defective within the warranty period.

a. Labor to repair any part or component proved to be defective within the warranty period will be provided at no charge for any item returned to our factory adequately packaged and insured with shipping costs prepaid. Standard surface freight shipping cost and return of the repaired part or component will be paid by Ohio Medical Corporation.

b. Before returning any part or component to the factory for warranty consideration, proper return authorization, and warranty claim form must first be obtained from Ohio Medical Corporation Service Department. A Purchase Order must be supplied by the claimant in the event that repairs or products returned for warranty consideration are determined to be of a Non-Warranty status.

c. The user will be required to issue a Purchase Order for replacement items. Upon reciept of the defective items, Ohio Medical Corporation will issue a credit to the user in the amount equal to the purchase order.

4. The warranty is valid only when the product has been properly installed according to Ohio Medical specifications, used in a normal manner and serviced according to factory recommendations. It does not cover failure due to damage which occurs in shipment or failures which result from accidents, misuse, abuse, neglect, mishandling, alteration, misapplication or damage that may be attributable to acts of God. Similarly, this warranty does not apply to units that are re-sold or rented to others by the purchaser.

5. Ohio Medical Corporation shall not be liable for incidental or consequential damages resulting from the use of this product. There are no expressed or implied warranties which extend beyond the warranty of merchantability fitness for a particular purpose to the equipment and/or to its parts and components.

6. THE CONDITIONS OF THE BUYER'S RESPONSIBILITY ARE:

a. The equipment is stored properly before installation;

b. The equipment is installed according to Ohio Medical Corporation specifications and installation procedures;

c. The room where the equipment is installed meets stated operating temperatures;.

d. The equipment is properly maintained and is not repaired or altered unless by an authorized representative of Ohio Medical Corporation.

INSPECTION UPON DELIVERY

Check crating or packaging for visible damage that could indicate damage to components of the equipment. Report any damage to delivering carrier immediately to process your claim.

If the equipment is to be stored prior to installation it must be protected from rain and snow to prevent formation of rust on machined surfaces and components.

It is important to verify the material received against the packing list to assure receipt of all of the material ordered. It is routine to include accessory items in cartons strapped to the crate.

FOR YOUR SAFETY:
Items in this manual that significantly affect safety are identified with the following headings. Please read and understand this manual, paying special attention to items identified with these headings!

DANGER! **WARNING!** **CAUTION!** and **NOTICE!** are displayed in large bold capital letters to call attention to areas of vital concern. They represent different degrees of hazard seriousness, as stated below.

DANGER!
Immediate hazards which will result in severe personal injury or death.

WARNING!
Hazards or unsafe practices that could result in personal injury or death.

CAUTION!
Hazards or unsafe practice which could result in minor personal injury, product or property damage.

NOTICE!
Indicates points of particular interest for more efficient and convenient installation operation.

Each section of this instruction manual, as well as any instructions supplied by manufacturers of supporting equipment, should be read and understood prior to starting the vacuum package. If there are any questions regarding any part of the instructions please call Ohio Medical 800-448-0700 before creating a potentially hazardous situation. Life, limb or equipment could be saved with a simple phone call.

Vacuum Pumps are precision high-speed mechanical equipment requiring caution in operation to minimize hazard to personnel and property. There are many obvious safety rules that must be observed in the operation of this type of equipment. Listed below are additional safety precautions that must be observed.

Transfer of toxic, dangerous, flammable or explosive substances is at user's risk. Turn off and lockout/tag (per O.S.H.A. Regulation 1910.147) the main power disconnect switch before attempting to perform maintenance on any part of the package.

Do not attempt to service any part of the unit while it is operating.

Per O.S.H.A. Regulation 1910.147 relieve the system of all pressure before attempting to service any part of the package.

DANGER! **WARNING!** **CAUTION!**

Do not remove or paint over any or instructional materials attached to the vacuum package. Lack of information regarding hazardous conditions can cause personal injury or property damage.

Do not use plastic pipe, rubber hose, or lead-tin soldered joints in any part of the vacuum package.

Modifications must not be made to the vacuum package without Ohio Medical's approval.

Be sure that all tools, shipping and installation debris have been removed from the vacuum package and installation site prior to starting the vacuum package.

Do not operate the vacuum pump in excess of the stated capacity.

Make a general overall inspection of the unit daily and correct any unsafe situations.

Reckless behavior of any kind is dangerous and can cause very serious injury to the participants.

Provisions should be made to have the instruction manual readily available to the operator and maintenance personnel.

Never use a flammable or toxic solvent for cleaning the air filter or any parts.

The owner, lesser or operator of the vacuum package is hereby warned that failure to observe the above safety precautions may result in serious injury to personnel and/or damage to property. Ohio Medical Corporation neither states as fact or in any way implies that the above list of safety precautions is an all-inclusive list, the observance of which will prevent injury to personnel or damage to property.

Every effort has been take to ensure that complete and correct instructions have been included in this manual. However, possible product updates and changes may have occurred since this printing. Ohio Medical Corporation reserves the right to change specification without incurring any obligation for equipment previously or subsequently sold.

WARNING!

EXPLOSION HAZARD PRESENT
Under no circumstances should a vacuum pump be used in an area that may be exposed to toxic, volatile, or corrosive atmosphere. Do not store toxic, volatile, or corrosive agents near the vacuum package.
These rotary vane vacuum pumps are not to be used for evacuation of flammable or explosive products.

WARNING!

HOT OIL HAZARD
Do not remove the oil fill plug when pump is running, as hot air and oil vapor will escape possibly causing severe burns. Add or check oil only when the pump is off and electrically locked out.

Always wear safety glasses.

WARNING!

Electric power always exists inside the vacuum switch whenever the package is connected to a power supply. Be careful not to touch any electrical leads when setting the vacuum switch.

WARNING!

Never exceed the design pressure for the system or overload the motor beyond it's Maximum Amp Draw. Full Load Amps x Service Factor = Maximum Amp Draw

WARNING!

Never assume a vacuum pump is safe to work on just because it is not operating. It may be in the automatic standby mode and may restart any time. Follow all safety precautions outlined under **"Stopping for Maintenance".**

LOCATION

CAUTION!

Indoor installation is recommended. However if it is necessary to install the pump outside, it must be protected from rain and other sources of moisture.

Do not operate the vacuum pump in ambient temperatures lower than 40°F. In cold climates the vacuum pump should be installed in a heated building.

Due to standard drive motor limitations, it is recommended that the pump be operated in temperatures under 104°F.

INSTALLATION

Bare Pump Installation

Install the pump in a horizontal position on a level surface so that the pump is evenly supported on its rubber feet. Leave 12-18" of access around the pump to allow proper cooling and adequate ventilation for the fan, radiator and motor.

Allow access to the oil sight glass in order to inspect the oil level and the exhaust port for easy access to change the exhaust filter. Do not tip the pump over if filled with oil The vacuum pump must be located in a clean, dry, well lighted area with the ambient temperature maintained at 40-104°F.

Equipment Installation

The equipment must be located in a clean dry well lighted area with the ambient temperature maintained at 40-104°F.

Do not operate the pump(s) in ambient temperatures lower than 40°F. In cold climates the vacuum system should be installed in a heated building.

Due to standard drive motor limitation, it is recommended that the system be operated in temperatures under 104°F.

Adequate space and ventilation must be provided on all sides of the unit for cooling and accessibility for maintenance of all components.

Inspection and maintenance checks are required daily. Therefore, we recommend a 36" walk way around the package.

Provisions must be made for adequate ventilation to remove the heat of compression (2550 BTU per horsepower) from the area.

CAUTION!

Improper leveling may cause unnecessary wear of the rotating parts such as bearings and couplings. In addition, improper leveling may make completion of the facility piping connections more difficult.

SETTING IN PLACE

Packages are manufactured in a modular fashion so that the various modules can be separated from each other to allow for transportation and installation limitations. The module bases may be bolted together directly or through base alignment plates. The piping system contains pipe unions to facilitate module separation, when necessary.

If the package modules have been separated prior to installation, they should be rejoined using the supplied base alignment plates to ensure proper re-connection of the piping system.

The package must be securely bolted to a solid stable floor or housekeeping pad utilizing all of the mounting holes provided in the frame. A shim or spacer is recommended to bring the vacuum frame level. The frame should not overhang the mounting surface on any side. The object is to make the frame tight and level to absorb and eliminate transient vibrations. The use of spring type mounting devices between the frame and the mounting surface is not recommended.

When possible, the unit should be installed on the ground or lower level machinery space.

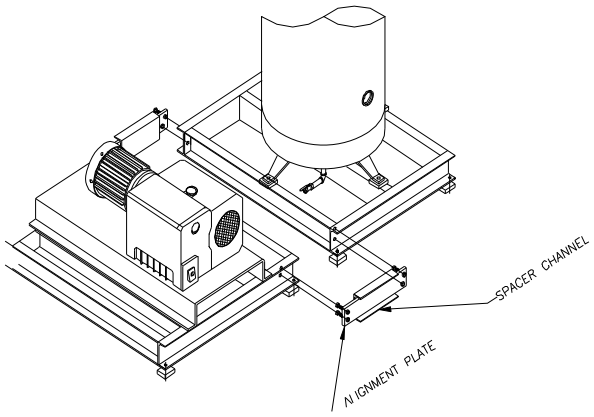

After the installation is complete, the module base alignment plates and spacers should be removed to provide optimal vibration control.

MOUNTING, ANCHORING

Proper mounting of the vacuum package is crucial to the safe operation and longevity of the equipment. The installation requires a flat and level concrete floor or pad. Satisfactory results can usually be obtained by mounting the package on the vibration isolating pads supplied with the vacuum package. The size and quantity of the vibration isolators supplied with the package meet or exceed the entire load. Over tightened pads can cause severe vibrations resulting in cracked welds or fatigue failure. Using 1/2" or 3/4" bolts, tighten bolts and torque to 50 lbs/sq. in. See figure below

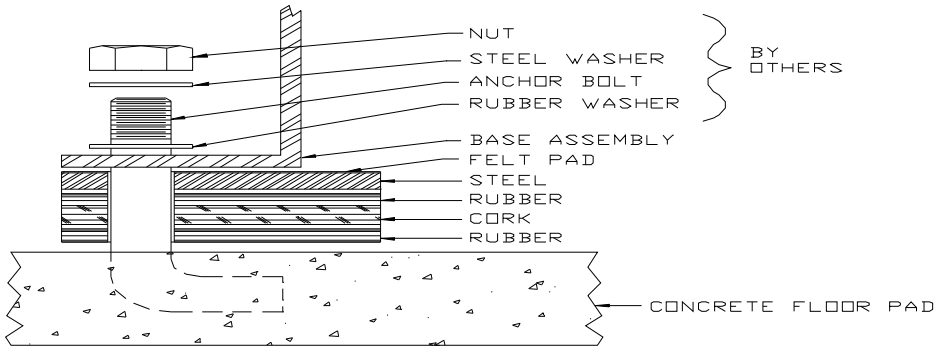

NOISE

Sound levels of 67-78 Dba are to be expected.

PIPING CONNECTIONS

All connecting piping must be in strict accordance with local codes and applicable engineering drawings.

All connection piping must be self-supporting to prevent stressing of the vacuum pump equipment. Flexible connectors must be used on all system connections to provide vibration control and system serviceability.

All connection piping must be clean and free of dirt or scale.

Exhaust piping should be terminated outside the building with the discharge line turned down and screened. For medical installations, this configuration is a requirement. See CGA P2.1 or NFPA-99 [para 4-3.2.1.9) For further instructions on exhaust piping, contact Ohio Medical Corporation Engineering Department.

Notes:
1. Exhaust piping and fittings represented by dashed lines are to be furnished and installed by contractor.
2. Exhaust from oil reservoir shall be collected to a single stack, run to outside air with the discharge line turned down and screened.

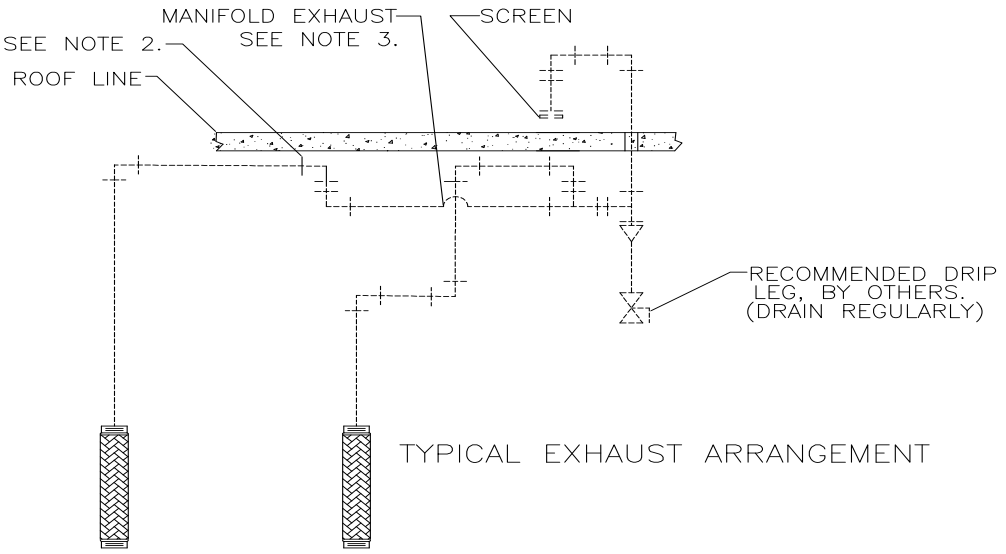

TYPICAL EXHAUST ARRANGEMENT

WARNING!

Do not use plastic pipe or rubber hose or lead tin soldered joints in any part of the vacuum system.

ELECTRICAL CONNECTIONS

Electrical connection should be performed by qualified electrician with knowledge of the National Electrical Code (N.E.C.), O.S.H.A. code and or any local or state codes having precedence. Note this unit must be grounded. Check to insure that proper electrical service has been made available.

Make sure the electrical supply, control cabinet and the motor nameplate data are the same.

Do not connect electrically if they are not the same.

Where the unit is on the emergency power source, make sure the normal power and the emergency power are in phase.

Electrical connections must be checked and tightened when necessary.

Before installation, the electrical supply should be checked for adequate wire size and transformer capacity. A suitable circuit breaker or fused disconnect switch should be provided. When a 3-phase motor is used to drive a vacuum pump, any unreasonable voltage imbalance between the legs must be eliminated and any low voltage corrected to prevent excessive current draw.

The installation, electric motor, wiring and all electrical controls must be in accordance with NFPA 70 1993 National Electric Code, National Electric Safety Code, state and local codes. Failure to abide by the national, state and local codes may result in physical harm and or property damage.

DANGER!

High voltage may cause personal injury or death. Disconnect and lockout/tagout per O.S.H.A. Regulation 1910.147 all electrical power supply before opening the electrical enclosure or servicing.

CAUTION!

Nema electrical enclosures and components must be appropriate to the area installed.

INITIAL START UP

Initial start-up assistance by factory authorized personnel is available. Call our Service Department at 1-800-448-0770 ext: 6279 for details.

PRE START-UP CHECK LIST

Never assume the system is safe to work on just because it not operating. It could restart at any time. Follow all safety precautions outline in “Stopping for Maintenance”.

WARNING!

Failure to perform the pre-start up check list may result in mechanical failure or property damage, serious injury or even death.
The following items should be performed prior to connecting the unit to a power source. If any conditions of the checklist are not satisfied, make the necessary adjustments or corrections before starting the unit.

Remove all installation tools from the unit and check for installation debris.

Check final leveling or shimming of the base and that the correct tightness has been applied to the vibration pads.

Check Electrical Service

Verify that the facility power breaker is turned “OFF”.

Check to insure that the proper electrical service has been made available. Make sure the electrical supply and the control panel and motor nameplate data are the same.

Verify the facility power breaker and the supply wire size is correct per N.E.C.

Check fuses, circuit breakers, and thermal overload for proper size.

All electrical connections both inside and outside the control cabinet must be checked and tightened when necessary.

Check all safety overloads to confirm they are set correctly for the current rating of the motor.

Check all conduit connections leaving the panel to insure they are tight.

Verify that all motor disconnects and HOA switches are in the “OFF” position.

After all of the above conditions have been satisfied, the unit can be connected to the proper power source.

Check Pump Rotation
Turn the motor disconnect “ON”. Jog the motor to insure the correct rotation by momentarily turning the H-O-A switch to the “H” (hand) position, then quickly returning the switch to the “O” (off) position. The correct direction of rotation is marked by an arrow on the motor housing.
Facing the fan motor cover, the correct direction of rotation is counter clockwise. If the rotation is not correct, for 3 phase units, switch any two of the three electrical service lines coming into the control panel.

Each pump should be individually started, run and adjusted.

STOPPING FOR MAINTENANCE

The following procedures should be followed when stopping the system for maintenance or service. Per OSHA Regulation 1910.147: The Control of Hazardous Energy Source (Lockout/Tagout): Disconnect and lockout the main power source. Display a sign in clear view at the main power switch stating that the vacuum system is being serviced.

Check Mechanical Service

Check motor coupling for alignment and tightness on shaft.

Manually rotate the vacuum pump(s) several rotations to be sure there are no mechanical interferences.

Check to insure all pipe union connections on the vacuum system and all the connections from the facility to the system are tight.

Check all manual shut-off valves in the system are in the correct position, (normally open or normally closed) as indicated on the tags attached to each valve.
Check to ensure the system isolation valve at the facility is closed.

Check for correct oil level in the sight glass. **The oil level should be visible in the upper sight glass between the min-max mark.**

Start-Up

Start the pump with the inlet closed. Run the pump for a few minutes and then stop the pump. Check the oil level again and make sure the oil level is between the **min/max mark** and full on the upper oil sight glass. Add oil if necessary. Pump oil should only be added when the pump is off and the circulating oil has had sufficient time to return to the oil sump.

SEQUENCE OF OPERATION
Automatic Operation

CAUTION!

Before turning motor disconnects, be sure that all HOA switches are in the "OFF" position.

Turn the motor disconnects to "ON" then turn all HOA switches to the "AUTO" position.

All vacuum pumps will start and all vacuum run lights on the control panel will turn on. The operation of any vacuum pump in the system is indicated visually by a pump run light, located on the panel.

Simplex System (One Vacuum Pump)

When the vacuum level in the receiver falls to the cut in setting on VS-1, the vacuum pump will start. It will run until the vacuum level reaches the cut out setting on VS-1, at which point the minimum run timer will keep the vacuum pump running 4 minutes. If the vacuum level stays above the set point, the vacuum pump will stop.

Duplex System (Two Vacuum Pumps)

When the vacuum level in the receiver falls to the cut in setting on VS-1, one vacuum pump (the lead vacuum pump) will start. When the vacuum level reaches the cut out setting on VS-1, the vacuum pump will stop.

If the lead vacuum pump cannot satisfy the facility demand the vacuum level in the receiver will continue to fall. When this level reaches the cut in setting on VS-2 the other vacuum pump (the "lag pump") will turn on. Both vacuum pumps will continue to run until the vacuum level in the receiver reaches the cut out setting on VS-1.

The system controls will alternate the lead vacuum pump function from one vacuum pump to the other every 1/2 hour. This is done to equalize the usage of the vacuum pumps, thereby maximizing their life.

Triplex System (Three Vacuum Pumps)

This system operates in the same manner as the duplex system described above except that the second and third vacuum pumps are used as the lag vacuum pumps with an additional vacuum switch (VS-3). As with the duplex system, the system controls will alternate the lead vacuum pump function to equalize vacuum pump usage.

Quadruplex System (Four Vacuum Pumps)

This system operates similarly to the triplex system with one lead vacuum pump and three lag vacuum pumps. However, a fourth vacuum switch (VS-4) with a setting below that of VS-3, is used to turn on the fourth vacuum pump (a third lag pump) in the event that the combination of the one lead vacuum pump and the two lag vacuum pumps cannot satisfy the vacuum demand. Again, the system controls will alternate the lead vacuum pump function to equalize vacuum pump usage.
Each vacuum pump can be operated manually by switching the corresponding HOA switch to the "HAND" position. This mode of operation is sometimes useful for troubleshooting and

maintenance purposes. However, it is important to note that in this mode, none of the automatic controls (vacuum switches, pump alteration, etc.) are effective.

Standard Vacuum Switches Settings

	QUAD		TRIPLEX		DUPLEX		SIMPLEX	
	Cut In	Cut Out	Cut In	Cut Out	Cut In	Cut Out	Cut In	Cut Out
VS-1	22	26	22	26	22	26	22	26
VS-2	21	25	21	25	21	25		
VS-3	20	24	20	24				
VS-4	19	23						

CAUTION!

When controlling vacuum pumps by "Hand" they must not be allowed to run unattended.

Lag Alarm (Optional) – Systems installed in medical facilities are equipped with a "Lag alarm" feature consisting of a warning light and alarm horn mounted on the control panel. The lag alarm is energized when the last lag pump is turned on. This alarm may be reset (turned off) by a push button on the control panel, after the vacuum level in the receiver has increased above the lowest level vacuum switch setting.

SHUTTING THE PUMP DOWN

To stop the pump, turn off the power. A built in anti suck back valve will prevent oil from the oil reservoir being sucked back into the cylinder after the pump is shut down.

In applications, where the quantity of water vapor is moderate, it is recommended to run the pump for 10 minutes to its normal operating temperature prior to going on process. The pump should also be operated off process for 10 minutes prior to shut down.

A slight air bleed (purge) is recommended during the 10 minute cycles to prevent vapor from condensing in the pump.

WARNING!

Never assume a vacuum pump is safe to work on just because it is not operating. It could restart at any time.

Display a sign in clear view at the shut-off valve stating that the vacuum pump is being serviced.

To service an individual vacuum pump, close the vacuum inlet isolation valve.

Lock out pressure relief valves within the pressurized system to allow the system to be completely depressurized. Never remove a plug to relieve the pressure.

Wait for the unit to cool before starting service.

Temperature of 125°F can burn skin.

MAINTENANCE SCHEDULE

To assure maximum performance and service life of your vacuum pump, a routine maintenance schedule should be developed. A sample schedule has been included here showing suggested maintenance intervals, to help you develop a maintenance schedule designed for your particular application. Time frames may need to be shortened in harsher environments.

Make copies of this checklist and retain the master to make more copies as needed. Keep the checklist and this instruction manual readily available near the vacuum system.

Scheduled maintenance intervals are rated for continuous duty operation at the maximum vacuum levels. The service interval can vary with duty cycle and vacuum level.

Recommended Maintenance	8 Hours or Daily	40 Hours or Weekly	160 Hours or Monthly	500 Hours or 3 Months	1000 Hours or 6 Months	2000 Hours or Yearly	5000 Hours or Every 2 Years
Manually open Receiver Drain – Drain Out Condensation	X						
Check For Unusual Noise or Vibration	X						
Check Distribution System For Leaks		X					
Inlet Filter – Inspect & Clean. Replace 1 Time Per Year				X			
Check Sound Level				X			
Inspect Contactor					X		
Inspect Vacuum Switches For Wear					X		
Inspect Check Valves					X		
Inspect Timer For Proper Alteration					X		
Test Alarms					X		
Grease Bearings on Motor (If Applicable)						X	
Inspect Oil Level	X						
Check For Oil Leaks	X						
Inspect Alarms	X						
Inspect Exhaust Pressure Gauge (Not To Exceed 7 PSIG)		X					
Check Oil For Contamination		X					
Inspect & Clean Cooling Fan & Grills			X				
Change Exhaust Filter 1500-2000 Hours Or When Pressure Exceeds 7 PSIG						X	
Change Oil & Oil Filter					X		
Inspect Vanes							X

Change oil & filter after the first 100 hours of operation.

THEORY OF OPERATION/PUMP CAPACITY

The SelecTORR Series Pump operates according to the rotary vane principal. The rotor is mounted concentrically on the drive shaft and positioned eccentrically in the cylindrical stator. The rotor has machined slots for radial sliding vanes, which divide the pump chamber into segments. The centrifugal force of rotation pushes the vanes out these slots against the wall of the cylindrical stator. The gas enters the vacuum pump inlet then passes through the anti-suckback valves and into the cylindrical stator. The inlet is closed as the rotor revolves; the gas is compressed and pushed out through the exhaust opening located between the pump housing and exhaust box. The oil collects in the bottom of the oil exhaust separator chamber as the gas passes through a demister then through an exhaust filter before finally exhausting to atmosphere.

SELECTOR SERIES© ROTARY VANE VACUUM PUMP PERFORMANCE DATA CHART

PUMP MODEL	PART NUMBER	HP	FREE AIR CAPACITY	19" Hg. (Gauge)		20" Hg. (Gauge)		25" Hg. (Gauge)		29.1" Hg. (Gauge)		29.9" Hg. (Gauge)	
				ACFM	SCFM	ACFM	SCFM	ACFM	SCFM	ACFM	SCFM	ACFM	SCFM
S1L (1PH)	262326	3/4	7 CFM	7	2.55	6.75	2.25	6.5	1.1	1	0.03	-	-
S1L (3PH)	262325	3/4	7 CFM	7	2.55	6.75	2.25	6.5	1.1	1	0.03	-	-
SD1	262057	1	14 CFM	14	5.1	14	4.7	14	2.3	21.9	0.36	-	-
S1	262064	1	14 CFM	14	5.1	13.5	4.5	13	2.2	2	0.06	-	-
SD2	262058	2	21 CFM	21	7.7	21	7	21	3.5	21	0.59	7.1	0
S2	262065	2	21 CFM	21	7.7	21	7	19.7	3.3	2	0.06	-	-
SD3L	262059	3	30.8 CFM	30.8	11.3	30.8	10.3	30.8	5.1	30.8	0.86	8.8	0.01
S3L	262066	3	30.8 CFM	30.8	11.3	30.8	10.3	29.4	4.9	3.5	0.09	-	-
SD3	262060	3	44 CFM	44	16.1	44	14.7	44	7.3	44	1.24	11.2	0.01
S3	262067	3	44 CFM	44	16.1	44	14.7	35.9	6	5	0.14	-	-
SD5L-N	262061	5	70 CFM	70	25.6	70	23.3	70	11.7	70	2	16.2	0.01
S5L-N	262068	5	70 CFM	70	25.6	70	23.3	70	11.7	7.5	0.21	-	-
SD5C-N	262323	5	118 CFM	118	43.2	118	39.3	118	19.7	118	3.3	39.1	0.03
S5C-N	262294	5	118 CFM	118	43.2	114.7	39.3	102.9	17.2	15	0.42	-	-
SD7C-N	262324	8	163.8 CFM	163.8	60	163.8	54.6	163.8	27.3	163.8	4.6	45.9	0.03
S7CN	262296	8	163.8 CFM	163.8	60	163.8	54.6	147	24.5	33	0.93	-	-
SD10B-N	262981	10	194 CFM	194	71.1	194	64.7	194	32.3	194	5.32	55.9	0.04
S10B-N	262925	10	194 CFM	194	71.1	194	64.7	176.4	29.4	35	0.99	-	-
SD15-N	262919	15	282 CFM	282	103	282	94	282	47	282	7.7	-	-
S15-N	262918	15	282 CFM	282	103	282	94	282	47	169	4.6	-	-
SD20-N	262927	20	306 CFM	306	112	306	102	306	51	306	8.37	118	0.08
S20-N	262926	20	306 CFM	306	112	306	102	306	51	206	5.65	-	-
SD25-N	262929	25	470 CFM	470	172	460	153	460	75.6	460	12.6	229.7	0.15
S25-N	262928	25	470 CFM	470	172	460	153	411	68.5	235	6.44	-	-

PUMP MODEL	S1/SD1	S2/SD2	S3L/SD3L	S3/SD3	S5LB/SD5LB	S5C/SD5C	S7C/SD7C	S10B-SD10B	S15/SD15	S20/SD20	S25/SD25
Length	17"	23.5"	25"	26"	28"	33 1/2"	36"	39 1/2"	57"	59 1/2"	67 5/8"
Width	9"	11 3/4"	11 3/4"	16 1/4"	16 1/4"	21"	21"	21"	33 7/8"	33 7/8"	33 7/8"
Height	9"	10 3/4"	10 3/4"	12 1/4"	12 1/4"	15 1/2"	15 1/2"	16"	28 1/2"	28 5/8"	28 5/8"
Weight	57 lbs	95 lbs	117 lbs	150 lbs	163 lbs	270 lbs	320 lbs	496 lbs	1111 lbs	1111 lbs	1550 lbs
Noise Level dB (A)	62	67	67	70	70	73	74	78	80	80	81
Inlet Connection	1/2" NPT	1 1/4" NPT	1 1/4" NPT	1 1/4" NPT	1 1/4" NPT	2" NPT	2" NPT	2" NPT	3" NPT	3" NPT	3" NPT
Outlet Connection	1/2" NPT	1 1/4" NPT	1 1/4" NPT	1 1/4" NPT	1 1/4" NPT	1 1/2" NPT	1 1/2" NPT	2" NPT	3" NPT	3" NPT	3" NPT
RPM	1450	1800	1800	1800	1800	1800	1800	1800	1200	1200	1200

SYSTEM COMPONENTS/MAINTENANCE

Efficiency and safety are the primary concerns when selecting components for the vacuum pump package. Products of inferior quality may hinder performance of the unit and could cause system failures that result in bodily harm or even death. Select only top quality components for your system. Call Ohio Medical Corporation at 800-448-0770 for quality parts and professional advice.

The vacuum pumps require very little maintenance. To ensure optimum performance, the following maintenance steps and components should be utilized.

Vacuum Inlet Filter
Depending on the application the pump(s) may be equipped with a special intake filter. The intake filter should be monitored on a weekly basis. Proper cleaning is necessary to prevent foreign particles from entering the pump.

Remove the clamps on the filter, and remove the cartridge. Care should be taken not to knock or jar the cartridge, which could lead to foreign matter entering the pump suction port. A horizontal filter installation is recommended to prevent this. Remove any loose particles from the filter canister. The cartridge can be cleaned with an air hose. The cartridge will need replacing, if it is extremely dirty or shows signs of moisture.

Check Valves
Check valves are designed to prevent back-flow of air pressure in the vacuum air system (air flows freely in one direction only). The check valve must be properly sized for airflow and temperature. Do not rely upon a check valve to isolate a vacuum pump from a pressurized tank during maintenance procedures.

WARNING!

The anti suck back valve does not replace the need for a check valve or shut off valve in the vacuum system. For duplex or larger systems where more than one pump can operate it is necessary to install a manual or automatic operated inlet valve.

Vacuum Inlet Isolation Valve
The vacuum inlet isolation valve blocks the flow of air, in either direction, allowing maintenance to the individual vacuum pump(s).

A manual drain valve is located at the bottom of the air receiver to allow for moisture drainage, extend piping away from the system to provide safe and convenient removal of excess moisture.

DANGER!

ASME coded pressure vessels must not be modified, welded, repaired, reworked or subjected to operating conditions outside the nameplate rating. Such action will negate code status, affect insurance status and may cause death, severe injury or property damage.

Gas Ballast Valve
All “SD” pumps are equipped with a gas ballast valve. Its main function is to prevent water vapor from condensing in the pump that causes emulsification of the lubricating oil resulting in possible pump seizure.

The gas ballast valve in the open position allows pumping condensable vapors, thus preventing condensation.

If pumping water vapor, the vacuum pump water vapor tolerance is stated in terms of the highest absolute pressure at which the pump can handle 100% water vapor. This means that water vapor on the inlet will exhaust without any condensation occurring in the pump even though the load is 100% water vapor, providing the pump is operating between 28.7”Hg and 29.9”Hg.

To remove the vapor, prior to shutdown, run the pump with the suction blanked off for 30 minutes.

Exhaust Filter
The exhaust filters should be replaced 1500-2000 hours or when pressure exceeds 7 PSIG. The exhaust filter life will vary depending on the application. If the exhaust filter begins to burn oil or foreign material is lodge in the exhaust filter it will be necessary to change the element. Other indicating factors to watch for are excessive smoke and oil mist on the exhaust of the pump, an increase in amps and oil leaking from the gas ballast valve on the SD series.

Do not clean or reuse these filters. Filters must be disposed of properly as they may contain toxic substances carried over from the process. When replacing the exhaust filter element also replace the o-rings.

EXHAUST VALVE AND EXHAUST BOX OIL RESERVOIR

The “SD” (deeper) vacuum pumps have an anti suckback valve which is open while in operation. The gas is compressed and then pushed out through the exhaust valves.

The “S” (medium range) vacuum pumps do not have exhaust valves. As the gas is compressed it is forced out through the exhaust box. After the compressed gas and oil is displaced into the exhaust box it passes through the oil demister pad. The oil demister captures the large oil droplets, which then flow back to the bottom of the exhaust box. The remaining oil residue is captured by the exhaust filter elements. The exhaust filter elements separates the exhaust air and oil to 99.9%.

The number of exhaust elements varies depending on the pump size. See the specific part listing for the correct part number and quantity.

As the exhaust element separates the oil, droplets will collect on the outside of the filter. The oil will then accumulate on the low end of the upper half of the exhaust box. When the ”SD” series (deeper vacuum pump) is operating, the oil will be drained back to the oil sump through the oil return valves.

On the “S” series pumps (medium range vacuum pumps) accumulated oil passes through the inlet flange continuously during operation via the oil return line. The oil return line is tied into the exhaust box, which is located downstream of the exhaust filter and is open to atmospheric pressure. This allows a constant amount of air sucked into the pump.

Lubrication
The pump should be mounted on an even grade before measuring the lubrication level. With the pump operating and the inlet closed, the oil sight glass should be at the max-mark.

Oil levels should be inspected daily. If the oil level falls below the max-mark, oil should be added through oil fill port.

The pump must be shut down long enough to allow the oil to return to the oil sump before adding oil. Do not add oil while the pump is in operation, hot oil vapor may emit through the oil fill port and cause injury. Never add oil through the inlet or exhaust ports. Never over fill the pump with oil. Use the sight glass to determine proper fill levels. The gasket should be properly seated and secured before replacing the oil fill plug.

Oiling system
To achieve the most effective operating conditions proper lubrication is necessary. As vacuum is created within the pump housing it draws oil from the oil reservoir to the pump end plates and through the vacuum pump. The oil tubing is sized to effectively distribute oil to the pump housing, which provides a seal between the vanes and the pumping chamber. At the same time oil is drawn through the automotive oil filter.

MODEL NUMBER	OIL CAPACITY GALLONS	STANDARD GALLON	STANDARD 5 - GALLONS
SD1/S1/S1L(1PH)/S1L(3PH)	1/8	249206	249207
SD2/S2/SD3L/S3L	1/4	249223	249224
SD3/S3/SD5LB/S5LB	1/2	249223	249224
SD5C/S5C/SD7C/S7C	1 1/2	249223	249224
SD10B/S10B	2	249223	249224
S15/SD15	5	249223	249224
S20/SD20	5	249223	249224
S25/SD25	5	249223	249224

- SD1/S1 uses a 10 wt non-detergent oil
- All other models use a 40 wt synthetic oil

CAUTION!

Over filling the pump with oil may result in misting. If the filter is oil soaked it must be replaced.

It should not be necessary to add or drain oil under normal operating conditions between oil changes.

Should a significant drop in oil occur, it could indicate there is an oil leak, a leaking anti suck back or inlet check valve, or the exhaust filter needs to be changed. If the exhaust filter needs to be changed, the pump will be exhausting an excessive amount of smoke.

It is normal for the pump oil to be light in color and be foamy when the pump is in operation.

If the pump oil appears to be milky or white in color, it is a signal water vapor may be present in the oil. To remove the water vapor, run the pump with the suction blanked off for an extended period of time.

If the oil is contaminated it will be dark in color and it will be necessary to change the oil.

Oil Change
The oil should be checked on a weekly basis for contamination. This can be accomplished by shutting down the pump and draining oil through the oil drain port.

Before an oil change the pump should operate at least fifteen minutes to allow the oil to warm up. After the oil has had sufficient time to warm up, turn the pump off and drain the oil through the drain plug.
Collect the remaining oil with a rag placed in front of the drain plug. It will be necessary to flush the pump if the oil is contaminated. Drain the contaminated oil through the drain port and refill the pump with clean oil through the oil filling port. Allow the pump to operate at least thirty minutes. Turn the pump off and drain all the oil. It may be necessary to repeat this operation to thoroughly flush out all the oil. After the pump has been successfully cleaned it will be necessary to replace the oil filter. Replace and tighten the oil drain plug. Fill the pump with clean fresh oil, through the oil fill port, careful observing the oil sight glass. Do not overfill. Replace the oil fill gasket, ensuring proper seating and then replace the oil fill plug and exhaust pressure gauge.

CAUTION!
Oil capacity can vary depending on proper drainage. The gasket should be properly seated and secured before replacing the oil fill plug.

1111 Lakeside Drive, Gurnee, IL 60031
Phone: 847-855-6279 / Fax: 847-855-6305
servicedept@ohiomedical.com

Pre-Start Up Check list

SO#:	Date:
Facility:	Contact Person:
Address:	Company:
City:	Signature:
State:	Phone:

Air & Vacuum System(s)

	System	#1	#2	#3
	Model#			
	Serial#			
		Yes/No/NA	Yes/No/NA	Yes/No/NA
System is properly anchored to housekeeping pad:				
Electrical wiring is complete and power is available:				
Piping connections are complete with "flex connectors":				
Water connections are complete with "pressure reducing valves":				
Dew Point and/or CO Monitors are installed and ready for power:				

Gas Manifold System(s)

	System	#1	#2	#3
	Model#			
	Serial#			
		Yes/No/NA	Yes/No/NA	Yes/No/NA
Manifold is properly anchored to floor and/or wall:				
Electrical wiring is complete and power is available:				
Gas cylinders are in place and installed on the manifold:				

Master & Area Alarms

All sensors & switches monitoring gas pressures are wired and piped.

Type	Location	Yes/No
Master		
Master		
Area		
Area		
Area		
Area		
Area		
Area		
Area		

Type	Location	Yes/No
Area		
Area		
Area		
Area		
Area		

Note: Start-up & In-service Training of systems will be scheduled during normal business hours between 8:00am & 4:30pm. Incomplete installation or personnel not available for training will result in rescheduling and an additional charge will apply.

Sign & Date

Signature Required

570075 (Rev 5) 580217

This page is blank intentionaly.

Toll Free: **800-448-0770**
Service: **Ext. 6279**
Customer Support: **Ext. 6211**
Tech Support: **Ext. 6234**

MACHINE DATA	
Make & Model:	
Serial #:	H.P.:
Lubricant:	Capacity:
Air Filter #:	
Oil Filter #:	
Separator #:	

Maintenance Log

Date	Hours	Work Performed	Done By	Next Service Due

579020 (Rev 1)

This page is blank intentionaly.

TROUBLESHOOTING GUIDE

SYMPTOM	PROBLEM CAUSE	SUGGESTED REMEDY
Pump can not maintain or reach required vacuum level.	Check oil for contaminates.	Drain oil from vacuum pump. Flush pump and fill with new oil. It may be necessary to replace oil filter. Turn pump on, run for 20-30 minutes, and take vacuum reading.
	Vacuum piping may not be leak tight.	Check piping for loose connections.
	Inlet screen may be plugged.	Remove and clean inlet screen. Replace if necessary.
	Low oil level, or no oil in reservoir. Inspect Discharge exhaust filter chamber in oil sump for oil build up due to plugged return line.	Turn pump off, drain remaining oil. Replace oil filter and refill pump with fresh oil.
	Contamination may be causing inlet valve plate to remain partially open or closed.	Clean inlet valve and screen.
	Leaking or defective oil tubing.	Retighten or replace oil tubing or fittings.
	Shaft seal leaking.	Check shaft seal, clean or replace as necessary.
	Vanes may be damaged or not positioned in rotor properly.	Replace or free vanes.
	Dirty or clogged oil filter .	Install new oil filter, replace with fresh oil if necessary.
Pump starts, has high amps.	Pump operating in the wrong rotation. Check Exhaust piping for closed valve or restriction.	Check for correct rotation, pump should be operating in a counter clock-wise rotation when viewing from the motor fan cover.
	Loose motor terminals; Motor coils improperly connected.	Tighten loose terminals; check motor wiring diagram.
	Oil level too high, or improper oil.	Check sight glass, see oil level and oil recommendations on page 9 & 12.
	Inlet filter is clogged due to foreign material.	Consult factory for recommendation on proper filter cartridge.

IF YOUR SYSTEM IS DOING THIS:

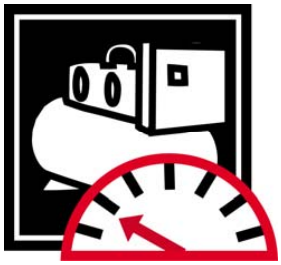

Providing a low level of performance.

WE SUGGEST YOU CHECK THIS:

A. If your system is equipped with a vacuum relief valve, it could be stuck open. The purpose of the relief valve is to open to atmosphere if the vacuum level achieved exceeds the desired level, thereby protecting the pump and other system components. However, if the vacuum relief valve seat is dirty or stuck open, the vacuum pump will always pull air from atmosphere, reducing the desired level of vacuum.

B. The system could also have a defective inlet check valve. If it is partially stuck closed, this could impede the amount of flow through the vacuum line, reducing performance. If you have a multiplex system and one of the inlet check valves is stuck open, the other pump could be pulling vacuum through the pump with the bad valve, instead of only evacuating the process line. This situation could also cause reduced vacuum performance.

C. Your vacuum pump may also have clogged exhaust filters. Their purpose is to eliminate oil mist from the discharge line. However, if they become clogged with contaminant's, this could create excessive back pressure, resulting in poor performance.

D. Your pump could have worn vanes. Each time the pump is energized, the vanes slide out of the rotor and contact the cylinder wall. When the vanes become worn, they will contribute to reduced pump performance and will need to be changed. If the vanes become very worn, they could come out of the rotor when energized and create severe pump damage.

IF YOUR SYSTEM IS DOING THIS:

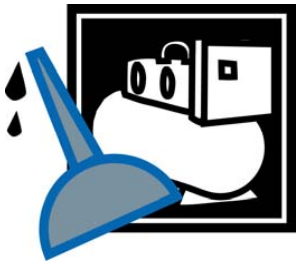

Experiencing oil blowby.

WE SUGGEST YOU CHECK THIS:

A. The vacuum pump could have a defective discharge exhaust filter. For example, the filter could have a broken seam, allowing oil to flow past the filter and into the exhaust line.

B. The exhaust filter could be loose or not seated correctly. A worn or unseated gasket seal could be the cause. Like situation A above, the oil would be able to escape past the filter and into the exhaust line.

C. It could be that the vacuum pump is operating at too low a vacuum level. In such a situation, the pump could be moving an excessive level of air flow, or CFM, allowing a substantial amount of oil to escape out the discharge.

D. The pump could have a clogged scavenger line. Most rotary vane pumps have scavenger lines that scavenge the oil that normally passes the exhaust filters back to the pumping chamber.

IF YOUR SYSTEM IS DOING THIS:



Generating excessive heat.

WE SUGGEST YOU CHECK THIS:

A. Your pump may have a clogged oil to air heat exchanger. If the oil to air heat exchanger is not clean and clear the heat exchanger will not function properly. The heat exchanger must be able to suspend the oil and allow air to pass over the fins to properly cool the oil.

B. The vacuum system may be subject to heat generated by other equipment in the room. This can be the case in mechanical rooms that have a lot of mechanical equipment located close together. Vacuum systems require a minimum amount of open space around them for ventilation and service. Make sure that your vacuum system is not directly in the path of heat rejection from other equipment.

C. The ambient temperature in the room may be too high. Most rotary vane vacuum pumps and systems are air cooled. One of the necessary conditions for effective heat control is proper room temperature. The room where your system is located may require additional ventilation or an external source of cooling brought to the room. Make sure to follow manufacturers recommendations regarding maximum allowable ambient temperatures for your system.

D. You may consider retrofitting your pumps for liquid cooling. If your facility has a source of chilled water, you may be able to liquid cool the pump oil through a liquid to liquid heat exchanger.

E. You may also consider the use of synthetic oil if allowed by the pump manufacturer. Many synthetic oils are more tolerant to high temperatures, resulting in less oil break down and possible longer service intervals.

IF YOUR SYSTEM IS DOING THIS:



Frequent starts and stops.

WE SUGGEST YOU CHECK THIS:

A. Your system may have a worn vacuum switch. This could result in sending signals to the motor to start and stop more frequently than necessary.

B. If your system is a multiplex system, the pump other than the one starting and stopping excessively could have a defective check valve on it. If it is stuck open, the valve may cause the other pump to start and stop excessively, as it is trying to maintain vacuum from a partially open vacuum line.

C. The system vacuum switches could be set at differential pressures that are too close together. The closer the differential pressures are set, the more the pumps will be energized, attempting to meet the switch settings.

D. No minimum run timer. Some systems, particularly larger ones, operate best when equipped with a minimum run timer. Such a device is designed to ensure that the pump, once energized, will run for a specified minimum time before shutting off. This device is used to help save energy due to excessive power inrush and heating of pump motors.

IF YOUR PUMP IS DOING THIS:

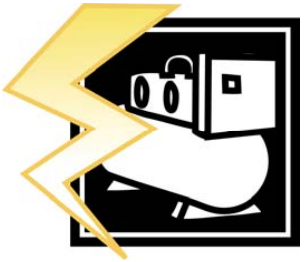

Experiencing high amp draw and motor trip out

WE SUGGEST YOU CHECK THIS:

A. Low line voltage. Power consumption is a function of line voltage and amperage draw (P=I x E). If the facility's line voltage dips below required levels, the pump and motor may draw excessive amps, resulting in excessive heat and motor trip out.

B. The motor starter could have a worn or pitted contactor. Such a situation would not allow the contactor to handle the proper level of amperage, causing it to interrupt power to the motor prematurely.

C. There could be a loose wire in the main power feed or the circuit to the pump motor. Loose or inadequate wire connections will cause excessive resistance and subsequent high amp draw.

D. Your pump could have restricted discharge filters. This condition could cause excessive back pressure, resulting in high amp draw and motor trip out.

E. Your pump could also have highly contaminated oil due to the ingestion of particulates. Such oil breakdown could cause the pump's motor to trip.

F. A weak motor. If the pump's motor is old, it could become weak due to numerous occasions of heating and cooling. The motor may need to be replaced.

IF YOUR PUMP IS DOING THIS:



Making a loud chattering noise.

WE SUGGEST YOU CHECK THIS:

A. The pump's vanes may be worn and need replacing. Whether your rotary vane pump is oil sealed or dry running, the vanes will eventually wear. The chattering noise could be caused by the excessive travel required when vanes are worn past the manufactures specifications.

B. The pump's cylinder may be wash boarded due to contaminated oil or the ingestion of particulates into the pumping chamber. Due to the tight clearance between the vanes and rotor slots, contaminated oil or particulates in the pump's cylinder could cause the vanes to come out of the rotor slots on an angle, damaging the vanes, cylinder, or both.

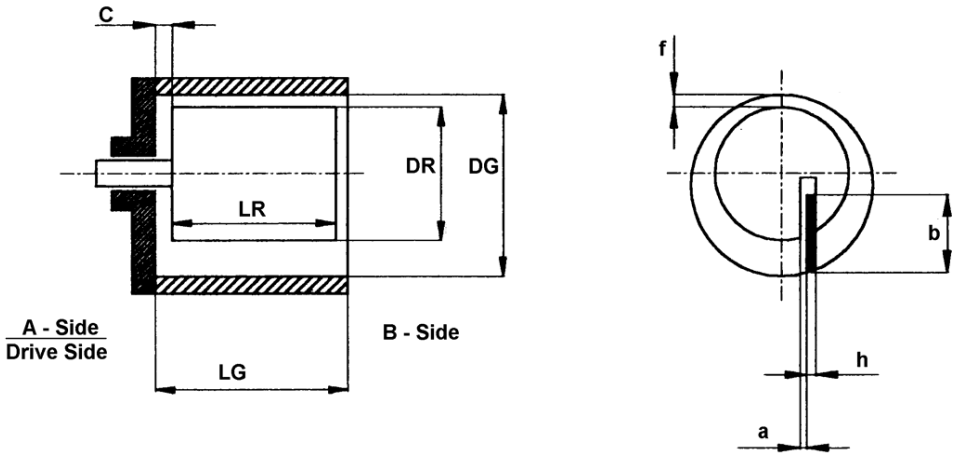

Rotor & Vane Dimensions
Figure 1

Type	Housing - Rotor Dimensions								Vane Dimensions		
TR	LG	± 0.05 DG	± 0.01 LR	± 0.01 DR	a	c	f	Total Axial Clearance	Length	Width (b)	Thickness (h)
S1	2.75	2.67	2.75	2.28	.2	.0024 .0017	.00079	Max. .0032 Min. .0031	2.75	.70	.149
S2	4.33	3.93	4.33	3.38	.2	.0044 .0036	.00118	Max. .00531 Min. .00358	4.32	1.18	.149
S3L	6.30	3.94	6.30	3.38	.2	.0047 .0039	.00118	Max. .00571 Min. .00393	6.29	1.18	.149
S3	4.33	4.92	4.33	4.14	.2	.0044 .0036	.00118	Max. .00531 Min. .00358	4.33	1.57	.149
S5LB	6.30	4.92	6.30	4.13	.2	.0047 .0039	.00118	Max. .00571 Min. .00393	6.29	1.57	.149
S5C	7.09	5.59	7.09	4.61	.2	.00039 0	.00157	Max. .00709 Min. .00590	7.08	1.97	.157
S7C	9.45	5.59	9.45	4.61	.2	.00079 0	.00157	Max. .00079 Min. .00669	9.45	1.97	.157
S10B	8.66	7.09	8.66	5.98	.2	.00626 .00512	.00157	Max. .00740 Min. .00512	8.65	2.05	.230
S15	10.43	10.03	10.43	8.42	.2	.00827 .00622	.00197	Max. .00953 Min. .00622	10.43	2.83	.230
S20	10.43	10.12	10.43	8.42	.2	.00827 .00622	.00197	Max. .00953 Min. .00622	10.43	2.83	.230
S25	15.75	10.12	15.74	8.42	.2	.00393 .00622	.00197	Max. .01185 Min. .00819	15.74	2.83	.230

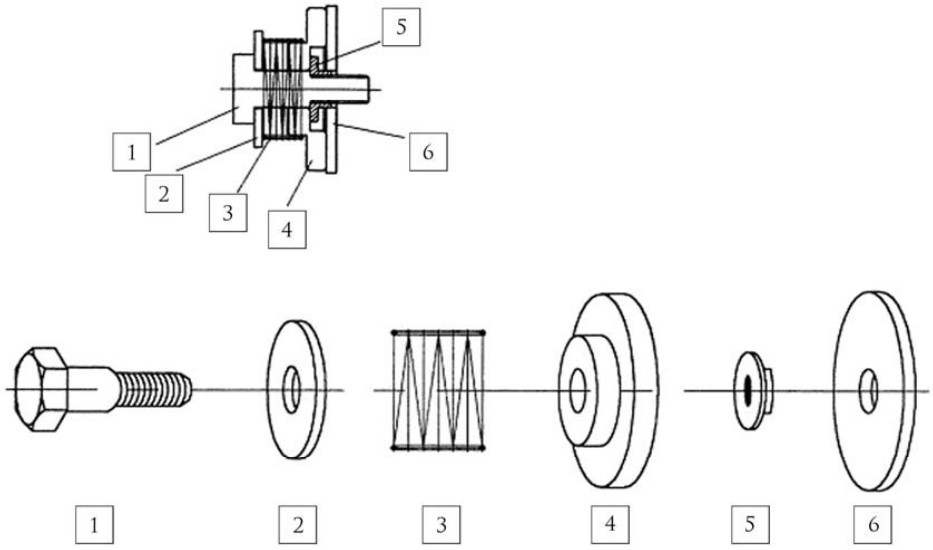

EXHAUST VALVE ASSEMBLY
FIGURE 2

Item No.	Pos. No.	Description	Qty
1	159.1	Fixed Bolt	1
2	159.2	Washer	1
3	159.3	Spring	1
4	159.4	Plate	1
5	159.5	Lock Nut	1
6	159.6	Seat Plate	1

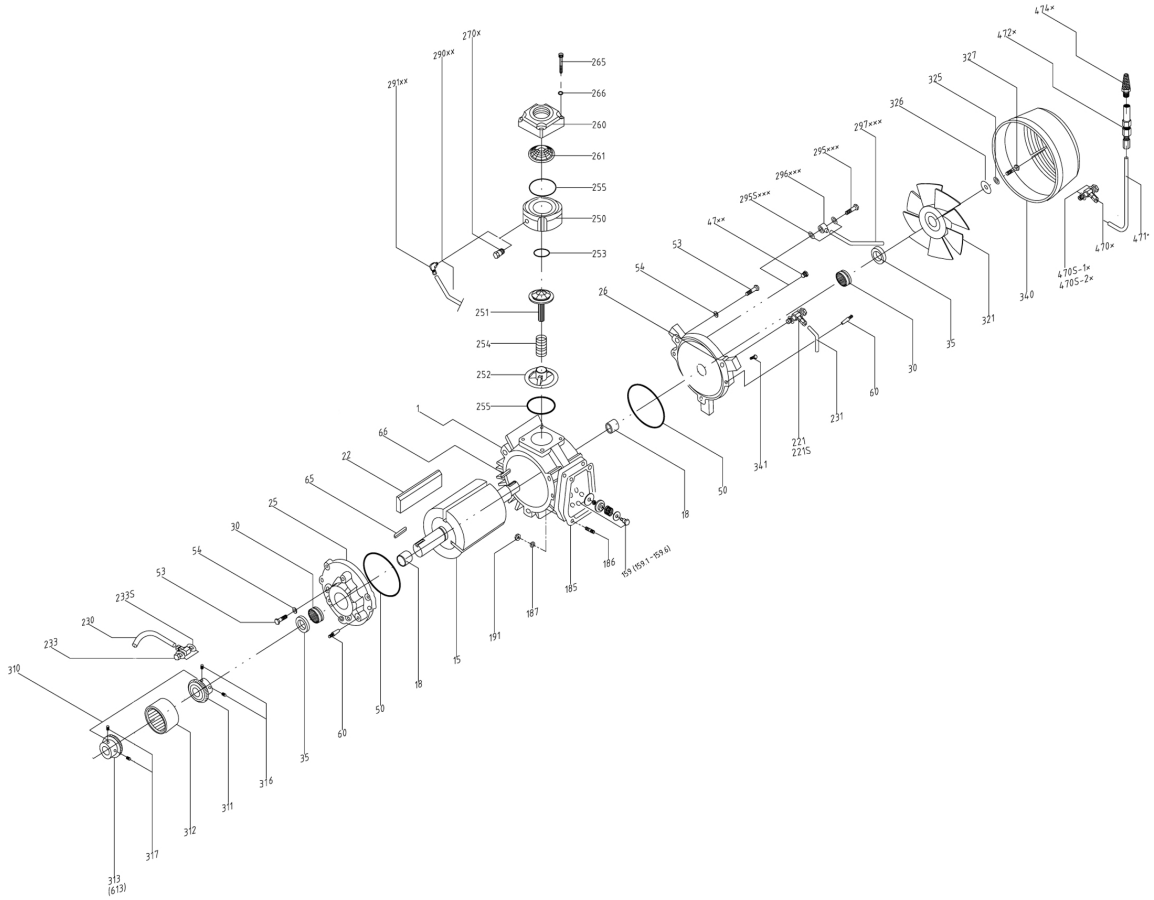

S2/S3L & SD2/SD3L PUMP MODULE

Notes:
“S” Type: x
“SD” Type: xx
“NM” Type: xxx

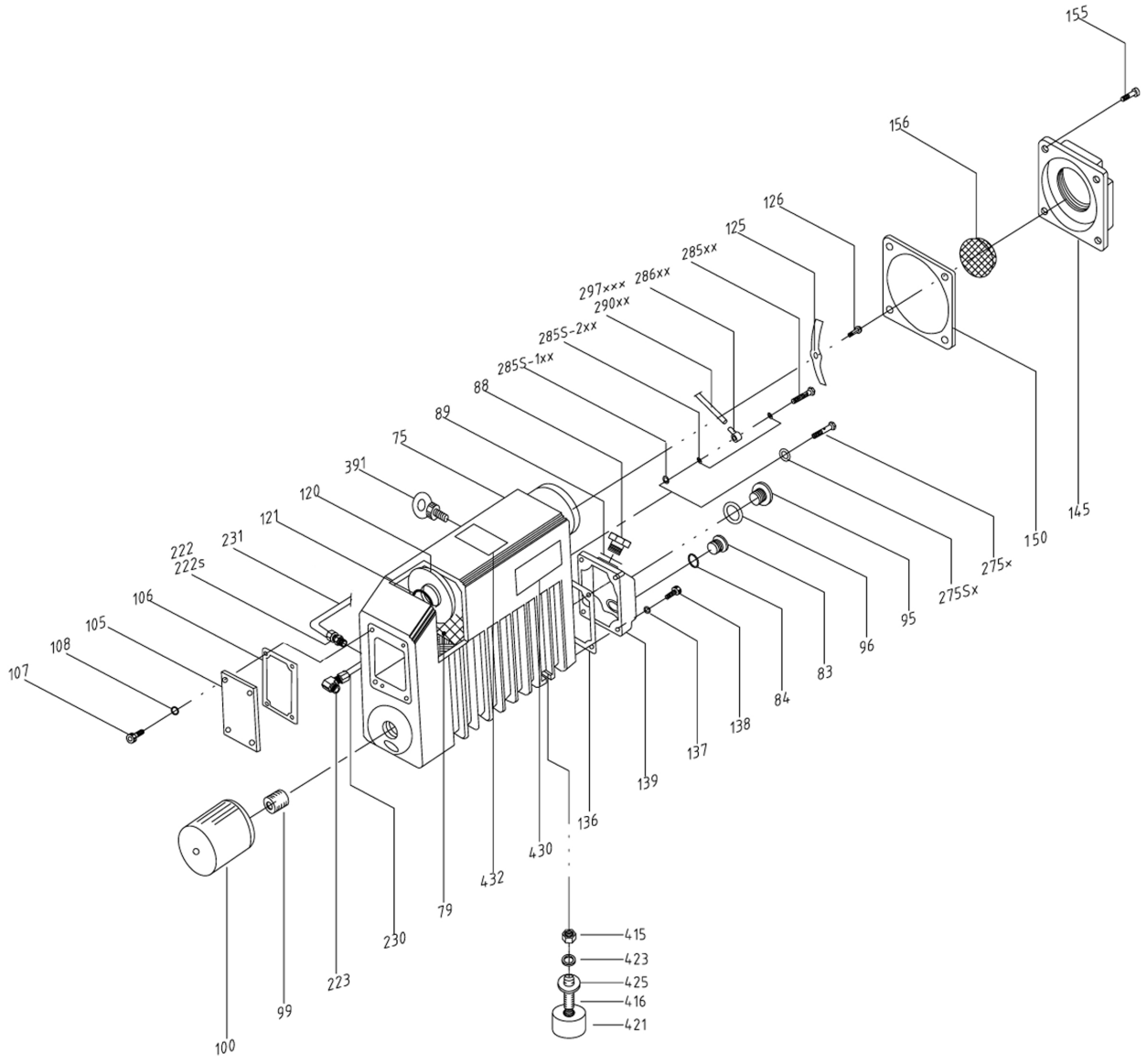

S2/S3L & SD2/SD3L OIL SEPARATOR HOUSING

Notes:
“S” Type: x
“SD” Type: xx
“NM” Type: xxx

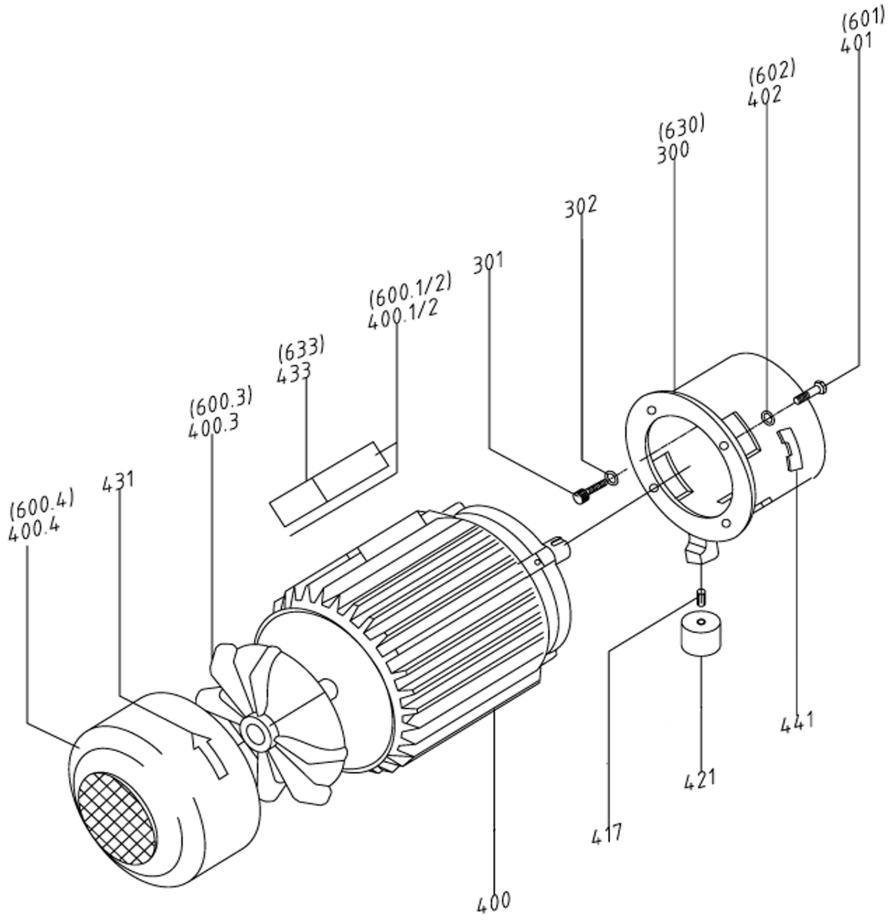

S2/S3L & SD2/SD3L MOTOR DRIVE ASSEMBLY

PARTS LIST - S2/SD2 - S3L/SD3L

Pos. No.	Description	Squire No.	Qty
1	Cylinder (S2/SD2)	262082	1
1	Cylinder (S3L/SD3L)	262163	1
15	Rotor (S2/SD2)	262180	1
15	Rotor (S3L/Sd3L)	262171	1
18	Sleeve, Bearing	262181	2
22	Vane (S2/SD2)	262182	3
22	Vane (S3L/SD3L)	262383	3
25	A-end plate	262183	1
26	B-end plate	262184	1
30	Bearing	262185	2
35	Shaft seal	262186	2
42	Supporting ring	262187	2
43	Hexagon head screw	262188	4
46.1	Sealing ring	262174	2
46.2	Sealing ring	262174	2
46.3	Sealing ring (For SD Only)	262174	2
47	Plug (For S Only)	262136	1
50	O-Ring, End plate	262191	2
53	Hexagon head screw	262192	6
54	Spring lock washer	262116	6
60	Taper pin	262194	4
63	Plug	262136	1
65	Shaft key	262197	1
75	Oil sump	262199	1
78*	Steel Demister	N/A	
79	Sheet metal baffle	262201	1
83	Oil sight glass	262099	1
84	Gasket, Oil sight glass	262100	1
88	Plug, Oil fill	262101	1
89	O-Ring, Oil fill plug	262102	1
95	Plug, Oil drain	262103	1
96	O-Ring, Oil drain plug	262104	1
99	Threaded fitting	262208	1
100	Oil filter	262209	1
105	Oil sump cover plate (S2/SD2)	262210	1
105*	Oil sump cover plate (S3L/SD3L) (up to pump serial # 01100571)	262210	1
105*	Oil sump cover plate (S3L/SD3L) (From pump serial # xxxx0581)	262910	1
106	Gasket, Oil sump cover (S2/SD2)	262211	1
106	Gasket, oil sump cover (S3L/SD3L) (Up to pump serial # 01100571)	262211	1

Pos. No.	Description	Squire No.	Qty
106	Oil sump cover gasket (S3L/SD3L) (From pump serial # xxxx0581)	262909	1
107	Allen bolt (S2/SD2)	262212	4
107*	Allen bolt (S3L/SD3L) (Up to pump serial #01100571)	262212	4
107*	Allen bolt (S3L/SD3L) (from pump serial # xxxx0581)	262212	6
108	Sealing ring	262213	4
120	Exhaust filter	262214	1
121	O-Ring, Exhaust filter	262106	1
125	Filter spring	262107	1
126	Slotted cheese head screw	262108	1
136	Gasket, Service cover	262217	1
137	Sealing ring	262213	4
138	Allen bolt	262212	4
139	Service cover	262220	1
143	Sealing ring	262213	4
145	Exhaust cover (w/ threaded flange)	262222	1
150	Gasket, Exhaust cover	262250	1
155	Allen bolt	262212	4
156	Outlet screen	262276	1
159	Exhaust valve ass'y	262112	2
159.1	Exhaust valve fixed bolt	262484	2
159.2	Exhaust valve washer	262205	2
159.3	Exhaust valve spring	262485	2
159.4	Exhaust valve plate	262486	2
159.5	Exhaust valve lock nut	262487	2
159.6	Exhaust valve seat plate	262280	2
185	Gasket, Cylinder	262228	1
186	Stud	262229	4
187	Spring lock washer	262116	4
191	Hexagon nut	262231	4
221*	BSLM hydraulic fitting	262904	1
222*	Straight hydraulic fitting	262908	1
223*	Elbow hydraulic fitting	262907	1
230*	Oil tube(A)	262906	1
231*	Oil tube(B)	262905	1
233*	BSLM hydraulic fitting	262904	1
250*	Inlet flange, lower housing (Before Serial Number 0203-2601)	262240	1
250*	Inlet flange, lower housing (From Serial Number 0203-2601)	262903	1

PARTS LIST - S21/SD2 - S3L/SD3L - Continued:

Pos. No.	Description	Squire No.	Qty
251*	Check valve plate	262902	1
252*	Check valve guide	262901	1
253	O-Ring, Check valve plate	262243	1
254*	Check valve spring	262900	1
255	O-Ring, Inlet part	262245	2
260	Inlet flange, upper housing	262246	1
261	Inlet screen	262247	1
265	Allen bolt	262248	4
266	Spring lock washer	262094	4
270	Plug (For SD Only)	262136	1
275	Oil return valve (For SD Only)	262137	1
276	Sealing ring (For SD Only)	262138	1
285	Hollow-core screw (For S Only)	262139	1
286	Banjo fitting (For S Only)	262140	1
310	Coupling	262264	1
311	Coupling, pump side	262267	1
312	Coupling insert	262266	1
313	Coupling, Motor side	262265	1
316	Set screw	262412	1
317	Set screw	262412	1
321*	Fan, Pump shaft end	264148	1
326	Washer	262269	1
327	Hexagon head screw	262206	1
340	Fan hood	262270	1
341	Hexagon head screw	262271	3
288	Sealing ring (For S Only)	262257	3
290	Return oil tube (For S Only)	262258	1
291	Elbow hydraulic fitting (For S only)	262120	1
300	Motor mounting bracket (IEC)	262261	1
301	Allen bolt	262262	3
302	Spring lock washer	262193	3
391	Eye bolt	262272	1
400	Motor (IEC) (S2/SD2)	252273	1
400	Motor (IEC) (S3L/SD3L)	262154	1
	Check Valve Assembly	262841	1

Pos. No.	Description	Squire No.	Qty
400.3	Motor Fan (IEC)	262207	1
400.4	Motor Fan Cover (IEC)	262215	1
401	Hexagon head screw	262192	4
402	Spring lock washer	262116	4
415	Hexagon nut	262231	1
416	Slotted set screw	262166	1
417	Slotted set screw	262460	2
421	Rubber foot	262168	3
423	Spring lock washer	262116	1
425	Washer	262673	1
430	Name plate	262667	1
431	Directional arrow label	262172	1
470	BSLM hydraulic fitting (For SD Only)	262232	1
471	Oil tube(C) (For SD Only)	262409	1
472	Nonreturn valve (For SD Only)	262410	1
474	Air filter (For SD Only)	262414	1
480	Gas Ballast Ass'y	262218	1
490	Gasket Set	262219	1
500	Maintenance Kit (S2/SD2)	262075	1
500	Maintenance Kit (S3L/SD3L)	262076	1
600*	Motor(NEMA) (S2/SD2)	262856	1
600*	Motor(NEMA) (S3L/SD3L)	262863	1
600.3*	Motor Fan(NEMA) (S2/SD2)	262855	1
600.3*	Motor Fan(NEMA) (S3L/SD3L)	262862	1
600.4*	Motor Fan Cover(NEMA) (S2/SD2)	262854	1
600.4*	Motor Fan Cover(NEMA) (S3L/SD3L)	262861	1
601*	Hexagon head screw(NEMA) (S2/SD2)	262853	4
601*	Hexagon head screw(NEMA) (S3L/SD3L)	262860	4
602*	Spring lock washer(NEMA) (S2/SD2)	262852	4
602*	Spring lock washer(NEMA) (S3L/SD3L)	262859	4
613*	Coupling, Motor side(NEMA) (S2/SD23)	262851	1
613*	Coupling, Motor side(NEMA) (S3L/SD3L)	262858	1
630*	Motor Mounting Bracket(NEMA) (S2/SD2)	262850	1
630*	Motor Mounting Bracket(NEMA) (S3L/SD3L)	262857	1
	Conversion Kit S2 To SD2	262824	1
	Conversion Kit S3L To SD3L	262825	1

REPLACEMENT PARTS LIST - S2/SD2 - S3L/SD3L

Description	Part Number
REPLACEMENT PUMPS	
S2 Rotary Vane Vacuum Pump w/ 230/460 Volt Motor	262065
SD2 Rotary Vane Vacuum Pump w/ 230/460 Volt Motor	262058
S2-LM Pump, Without Motor (Includes Both Couplings)	262065-LM
S3L Rotary Vane Vacuum Pump w/ 230/460 Volt Motor	262066
SD3L Rotary Vane Vacuum Pump w/ 230/460 Volt Motor	262059
S3L-LM Pump, Without Motor (Includes Both Couplings)	262066-LM
2 HP TEFC WEG Motor - 208-230/460 Volt, 3 Phase, Nema 145TC	244250
REPLACEMENT ACCESSORIES	
Inlet Filter	
Canister With Element	233752
Replacement Element Only	SCAFC475500
Inlet Check Valve	247519
Starter Box With On/Off Switch And Overload	
S2/SD2/S2-LM	
460 Volt Starter	GV2ME08
Enclosure For Starter	GV2MC01
230 Volt Starter	GV2ME14
Enclosure For Starter	GV2MC01
S3L/SD3L/S3L-LM	
460 Volt Starter	GV2ME10
Enclosure For Starter	GV2MC01
230 Volt Starter	GV2ME16
Enclosure For Starter	GV2MC01
Exhaust Filters (1 Needed)	262214
Spin On Oil Filter	262209
Filter Kit - (Includes (1) Exhaust Filter, (1) O-ring For Exhaust Filter, Spin On Oil Filter, Gaskets For Exhaust Cover & Separator, O-rings for Oil Filter & Drain Plugs.)	264139
Rebuild Kit - (Includes Vanes, Seals, Bearings, Gaskets, Filters, etc.	
S2/SD2/S2-LM	262075
S3L/SD3L/S3L-LM	262076
Gasket Kit	262219
Vacuum Pump Oil - 40 Wt Synthetic - 5 Gallons	249224
Liquid Cooling Kit - (Includes 2 Oil Lines, Oil Filter Adapter, Plate Type Heat Exchanger	262164

For 24/7 Technical Support, Call 847-855-6234 For Assistance

Ohio Medical Corporation®
always there | for life

Ohio Medical Corporation
1111 Lakeside Drive, Gurnee, IL 60031 - 4099
Phone: 800-488-0770 or 847-855-0500
Fax: 847-855-6300
www.ohiomedical.com